COUNTAX

SERVICE BULLETIN 14-T3-26

DATE: 02\07\2014

MODELS CONCERNED: MK4 300 Litre PGC & All MK4 Tractors

MK4 B Series B60-4TRAC, B250-4TRAC / C Series C50, C60, C80 / F Series F60-4TRAC, F250-4TRAC / T Series T50, T60 & T80.

Also affects MK3 PGC / Scarifier / Spreader. See Bulletin 14T325 for MK3 solution.

CONCERN: Requested PGC loom upgrade. This kit is for upgrading tractor and PGC looms.

Cable Plug

A loom upgrade kit is now available for the above mentioned MK4 tractor & PGC units made in 2014 up until June 16th. All tractors made from June 16th are fitted with the new style of loom socket as standard.

For MK3 Scarifier, Spreader & PGC loom upgrade components see bulletin 14T325.

The following kit components for MK4 include a new tractor loom, new MK4 PGC loom and fixings.

Part	Part No.	Kit Qty	Kit Part No.
MK4 C-SERIES PGC RETRO FIT MINI LOOM	449881800	1	50100050
MK4 PGC LEAD WITH ROUND PLUG	449881900	1	
PLT, CPC PLASTIC CONNEC TOR MOUNT	549122800	1	
PLATE, RETRO FIT PGC LOOM MOUNT	549123900	1	
M3 x 10 POZI PAN HD SCREW - ZINC & CLEAR	028003600	4	
M3 X16 POZI PAN HEAD MACHINE SCREWS	019485300	2	
M3 NYLOC NUT	04912700	6	
M3 FORM A WASHER	019485400	4	

REAR TRACTOR LOOM UPGRADE PARTS LIST FOR EARLY 2014 MK4 C, B, F & T SERIES TRACTORS & MK4 300L PGC

TRACTOR REPLACEMENT LOOM SOCKET LOCATION

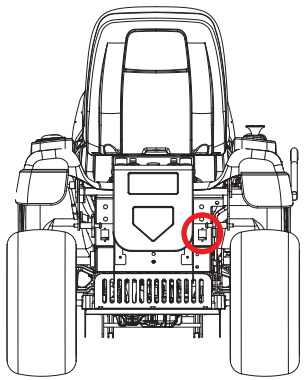

PGC REPLACEMENT LOOM LOCATION

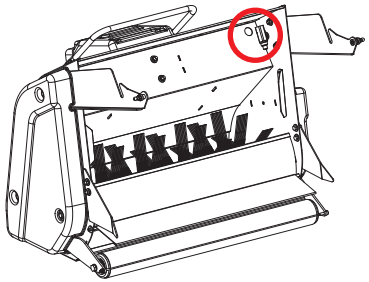

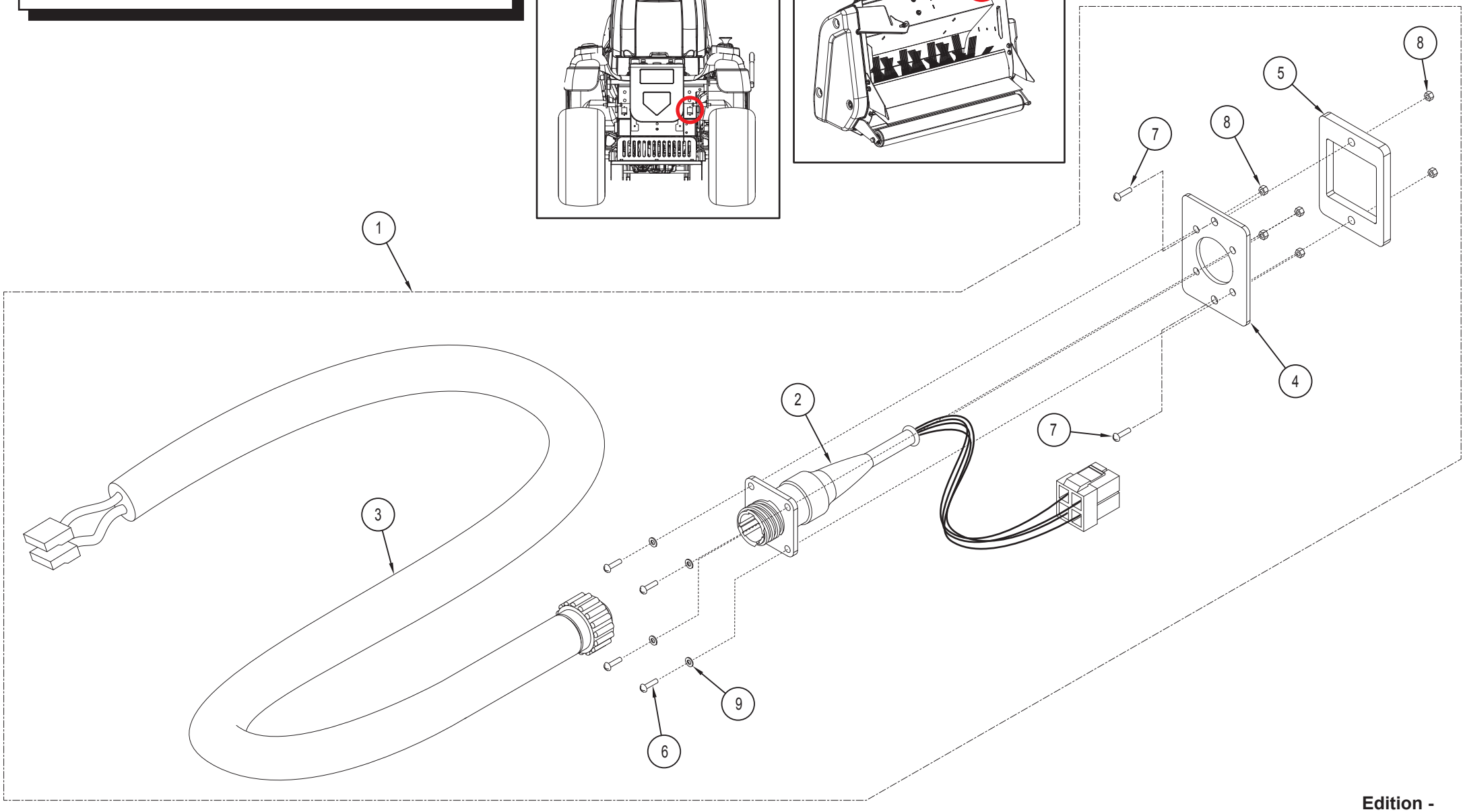

Edition -

Parts List No. 366022100 -
Kit No. 50100050

JUNE 2014

THIS IS A REAR ACCESSORY LOOM UPGRADE KIT FOR EARLY 2014 MK4 C, B, F & T SERIES TRACTORS MADE UP UNTIL JUNE 16TH 2014. PART 3 REPLACES THE MK4 300L PGC LOOM SECTION. PART 2 ADAPTS THE REAR TRACTOR CONNECTOR SOCKET. BRACKETS AND FIXINGS ARE FOR MOUNTING THE TRACTOR SOCKET.

REAR TRACTOR LOOM UPGRADE PARTS LIST
FOR EARLY 2014 MK4 C, B, F & T SERIES TRACTORS

	Description	Part Number	Qty	Kit Part No.
1	Full Kit	50100050	1	-
2	MK4 C-SERIES PGC RETRO FIT MINI LOOM	449881800	1	50100050
3	MK4 PGC LEAD WITH ROUND PLUG	449881900	1	
4	PLT, CPC PLASTIC CONNEC TOR MOUNT	549122800	1	
5	PLATE, RETRO FIT PGC LOOM MOUNT	549123900	1	
6	M3 x 10 POZI PAN HD SCREW - ZINC & CLEAR	028003600	4	
7	M3 X16 POZI PAN HEAD MACHINE SCREWS	019485300	2	
8	M3 NYLOC NUT	04912700	6	
9	M3 FORM A WASHER	019485400	4	

JUNE 2014